Analyze the trend of product characteristics by the extraction of reviewing comments to provide enterprises with concise Information

國立清華大學

NATIONAL TSING HUA UNIVERSITY

Yu-Chieh WU

Yu-Jie LAN

Yuan FENG

Teng-Hsien HUANG

National Tsing Hua University, Taiwan

Outline

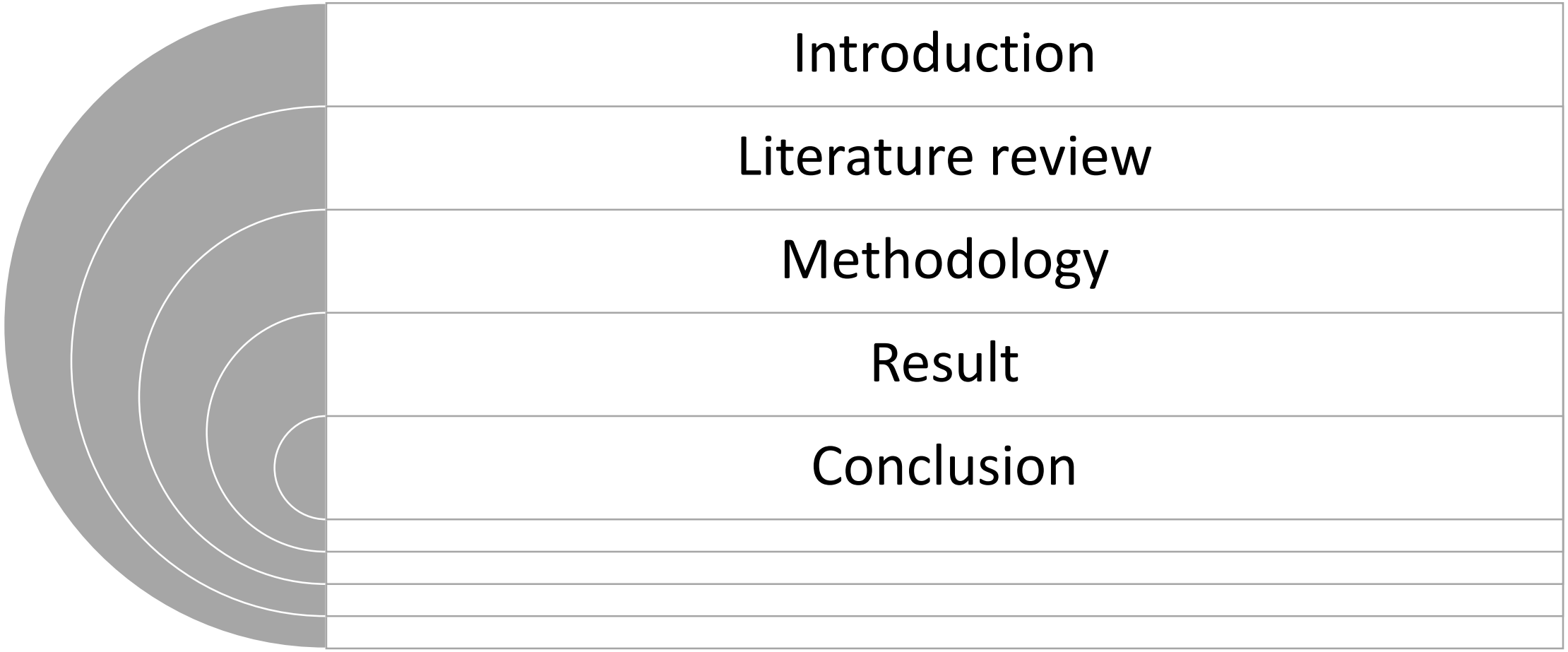
Introduction
Literature review
Methodology
Result
Conclusion

Introduction

- Innovation
- improvement
- Comments

- Analyzing
- Time Series
- System

Introduction
Literature review
Methodology
Result
Conclusion

國立清華大學
NATIONAL TSING HUA UNIVERSITY

Introduction

啾啾啾...終於..不需要任何技巧，Youtube最新版已經可以看1440p了.. 站內精選	27 32,541	basic 2014-12-17 23:56	ho9442 2015-01-01 22:28
閃亮亮的精品，SWAROVSKI(施華洛世奇) FOR NOTE4...金色閃亮開箱 站內精選	14 18,716	basic 2014-12-17 23:55	juillet07 2014-12-31 22:11
不知道哪邊已經有A3，A5展示機?	2 3,010	lulala 2014-12-22 02:32	毛毛 2014-12-30 15:59
又有免費Note 3 Neo可以拿?	1 2,495	toothless 2014-12-30 14:34	toothless 2014-12-30 14:34
韓流來襲，三星推出時尚平台「K-JJANG 讚」 站內精選	4 6,780	丹尼爾 2014-12-29 16:53	毛毛 2014-12-30 13:16
覺得你的NOTE4待機不夠省電嗎?Google服務在做怪... 站內精選	12 63,336	basic 2014-12-12 14:46	VinCent 2014-12-30 12:54
NOTE 4 誇張的故障	5 13,486	iagong.yang 2014-12-21 13:47	VinCent 2014-12-30 12:50
Note4信號有問題,各位不知道有沒有	16 24,669	柳丁 2014-10-31 10:52	組槍 2014-12-30 08:47
Samsung Note4 中國大陸版與台灣版的電池尺寸是否不同??	1 2,660	Max 2014-12-29 12:02	Max 2014-12-29 12:02
Samsung GALAXY A TVC分享欣賞	1 1,608	咕咕G™ 2014-12-25 22:41	咕咕G™ 2014-12-25 22:41

http://www.eprice.com.tw/mobile/talk/4523/0/39/

批踢踢實業坊 › 看板 iPhone

看板 | 精華區

1	[問題] Line備份除了iCloud之外的辦法?	1/08 jacklyl
4	(本文已被刪除) [op840906]	1/08 -
6	[問題] 6S原廠矽膠殼小問題	1/08 james925757
2	(本文已被刪除) [antjuice]	1/08 -
1	[問題] Yahoo mail app現在不能用嗎？	1/08 PrinceSteven
2	[問題] 同步google日曆的訂閱日曆	1/08 gn01958627
21	[iAPP] Send your location (Promo Codes)	1/08 ahungry
6	[問題] 想請問這支6 plus殘值還剩多少？	1/08 GOTWD
1	[問題] itunes回復備份line無法恢復	1/08 lazurite917

https://www.ptt.cc/bbs/iPhone/index.html

如何將iphone裡的相簿分類回傳至電腦？	1	2015-03-07 18:40 ariaaria	2015-03-31 00:02 ariaaria
i6+接電腦(win8.1)如何正確存取相片?	9	2015-03-29 18:33 白鬼院凜凜蝶	2015-03-30 23:06 kengriffey
今天跳出問我要不要付費訂閱app 不小心按到	5	2015-03-28 15:29 king62117	2015-03-30 22:52 Chiu.
請問關於iphone6+退出程式一問 » 2 3	21	2015-03-28 19:35 白鬼院凜凜蝶	2015-03-30 18:32 kengriffey
iphone 的遊戲通知出了問題....	1	2015-03-30 13:58 g32686	2015-03-30 16:28 hsiang0972
「附圖」在中國買iphone6會內附Lightning 對 Micro USB 轉接器嗎 ...	2	2015-03-28 19:51 cliff020202	2015-03-30 16:23 風竹
iphone 6 plus保護殼詢問	5	2015-03-30 00:17 放馬過來吧	2015-03-30 14:43 tj6tj6
第一次用愛i6電池保養！ » 2 3 4	32	2015-03-29 09:20 chen0335	2015-03-30 09:45 chen0335
I6如何判斷有無泡水？	5	2015-03-29 12:30 張小小宇	2015-03-30 09:43 a94129
iphone 5的LED 來電及信息 都不會亮 (手電筒會亮) / iOS 8.2 / LED...	6	2015-03-28 16:19 TheRock	2015-03-30 04:40 TheRock
有沒有其他品牌有出類似iphone的這款麥克風耳機？	2	2015-03-29 22:19 Jennifer.K	2015-03-30 22:23 cky1023

https://www.mobile01.com/topiclist.php?f=383

Introduction
Literature review
Methodology
Result
Conclusion

Literature Review

Text mining

Product Life

Introduction
Literature review
Methodology
Result
Conclusion

Literature Review

- Text mining

✓Using sentiment analysis and text mining approaches to detect and predict the hotspot online forums.(N. Li and D. D. Wu, 2009)

✓proposed an extracting keywords method of multi-steps and extending TF weights.(B. Hong and D. Zhen, 2012)

✓ proposed a NLP and Ontology Based Clustering TVC Algorithm to anylize the community platform's key words.(D. Shabina et al, 2016)

Introduction
Literature review
Methodology
Result
Conclusion

Literature Review

- Product life

✓Based on the product life cycle theory, the influence of each stage of the whole life cycle on the maintainability of products is discussed in depth.(D. Melser and I. A. Syed, 2016)

Introduction
Literature review
Methodology
Result
Conclusion

Methodology

- Step 1- Break the sentences

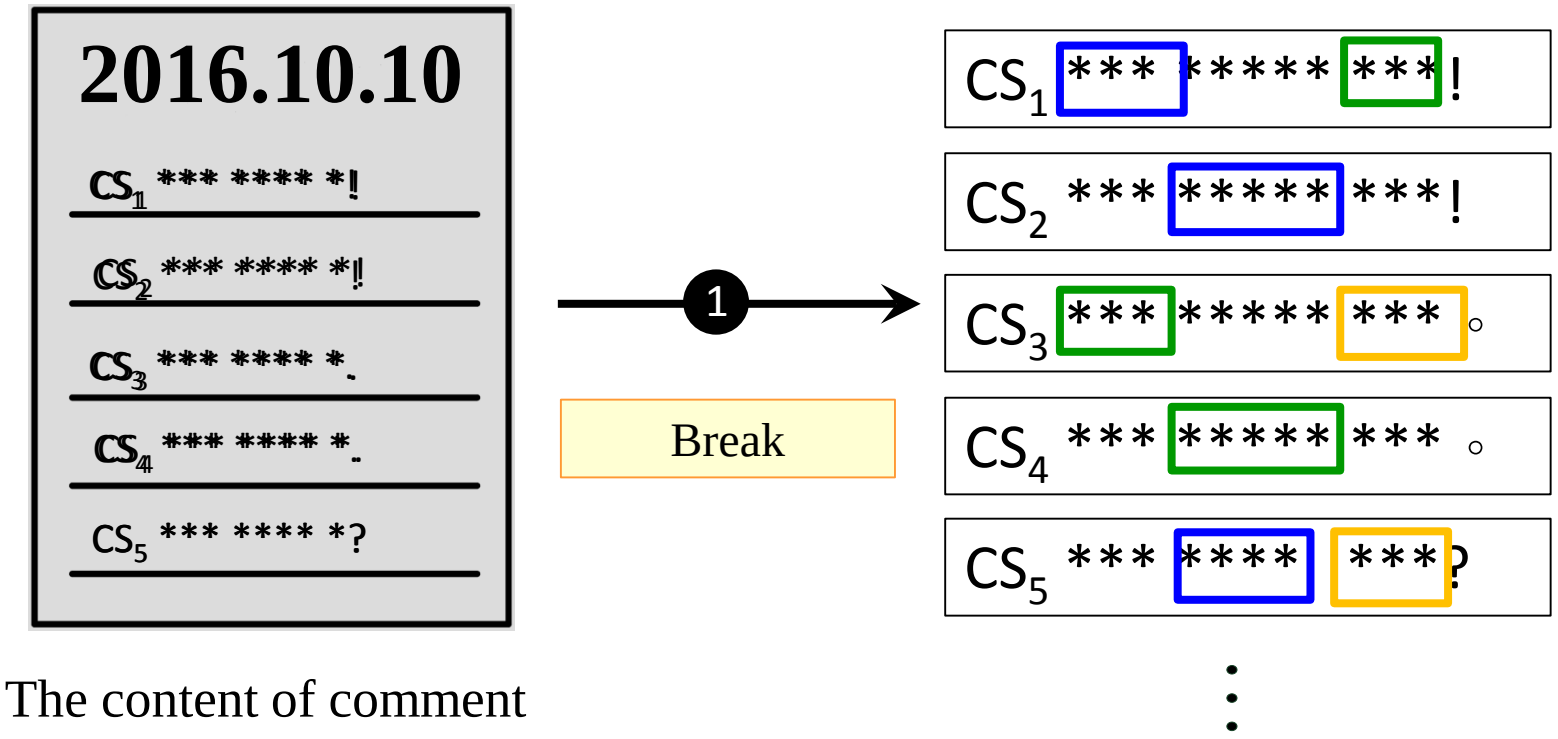

The content of comment

Introduction
Literature review
Methodology
Result
Conclusion

Step 2- Characteristics capture

Complete sentence in the comment

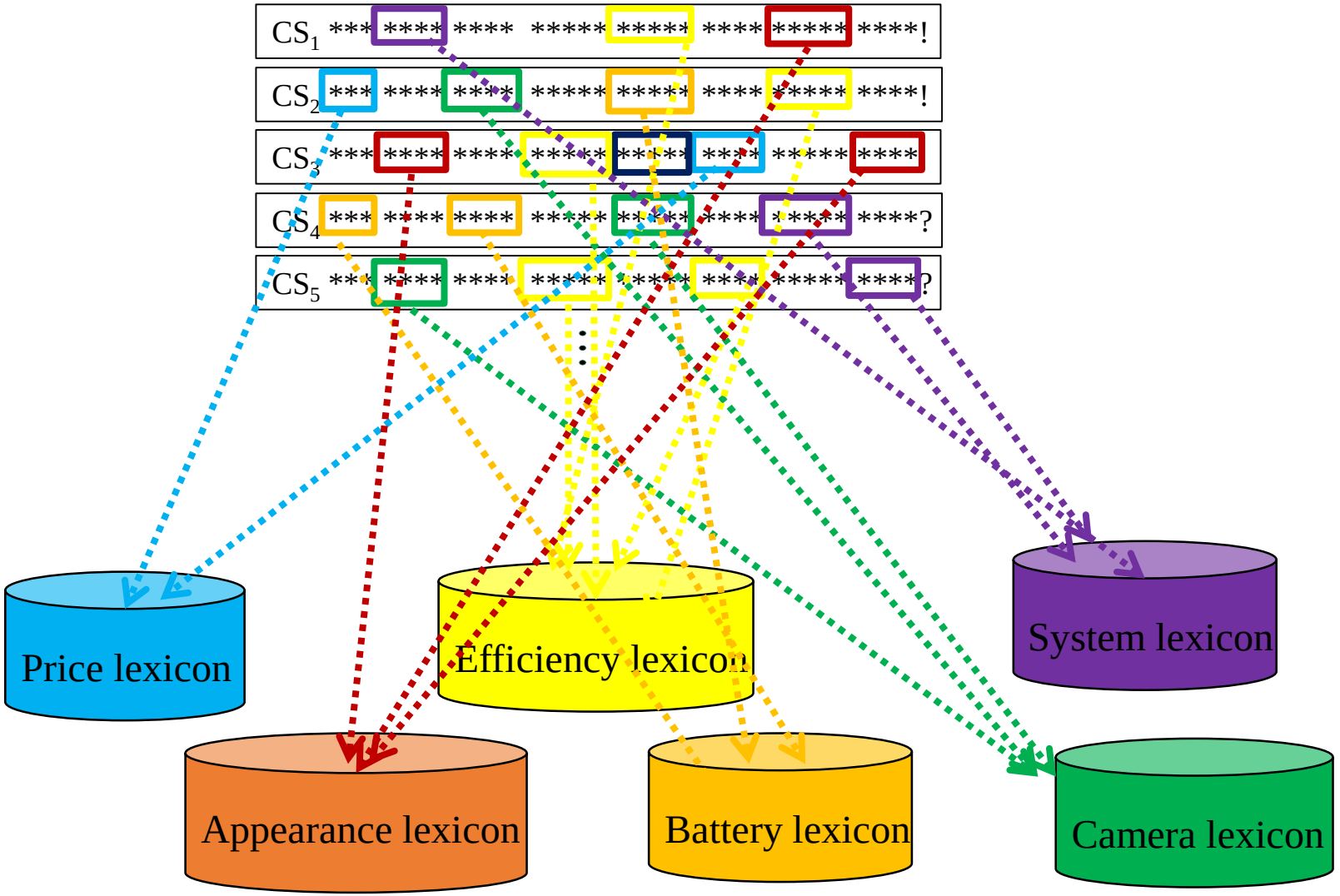

Methodology

Introduction
Literature review
Methodology
Result
Conclusion

User interface

Methodology

Step 1

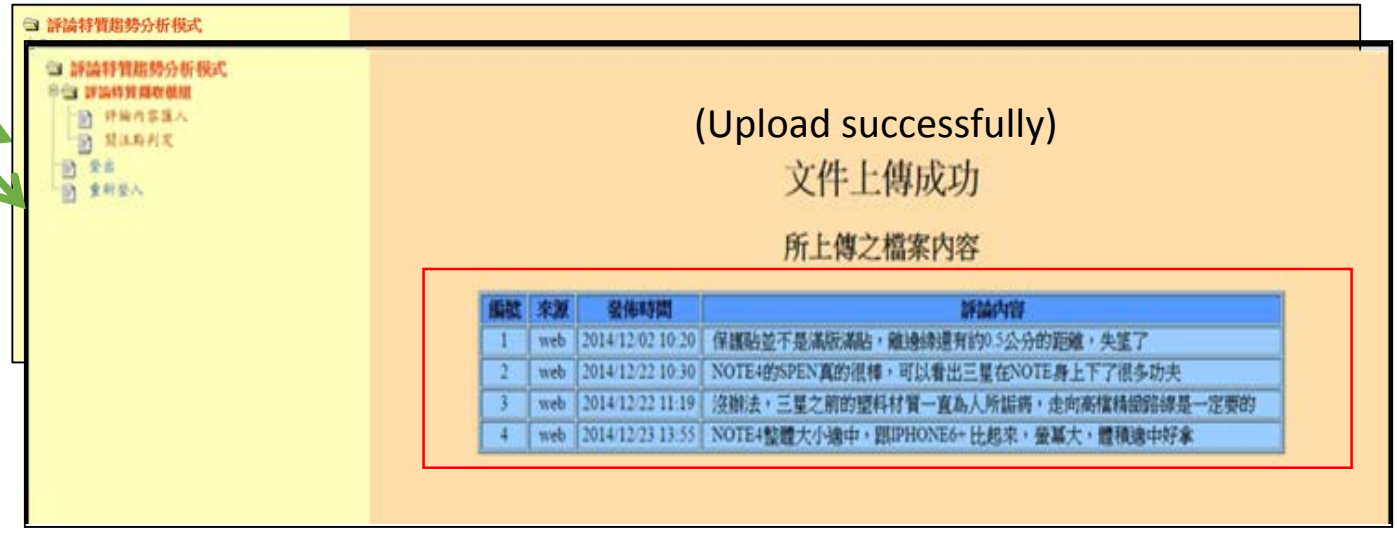

Step 2

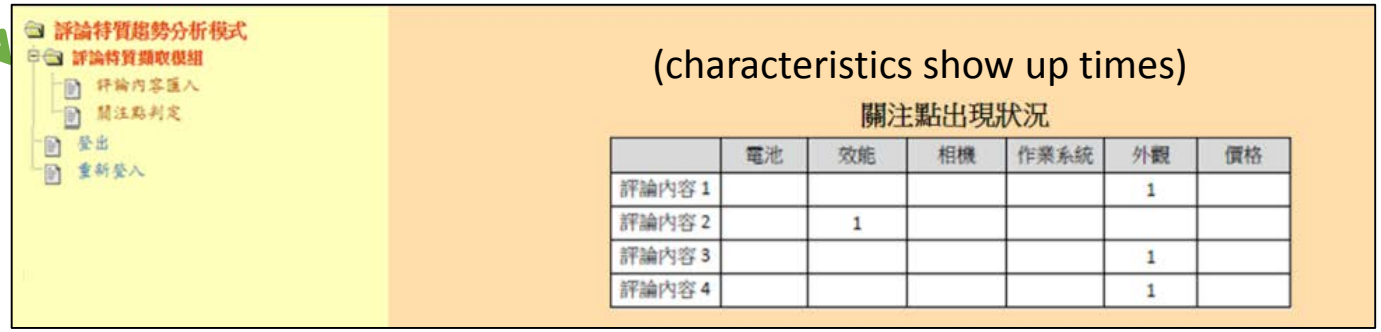

Introduction
Literature review
Methodology
Result
Conclusion

國立清華大學
NATIONAL TSING HUA UNIVERSITY

comment's characteristics trend (Samsung Note4)

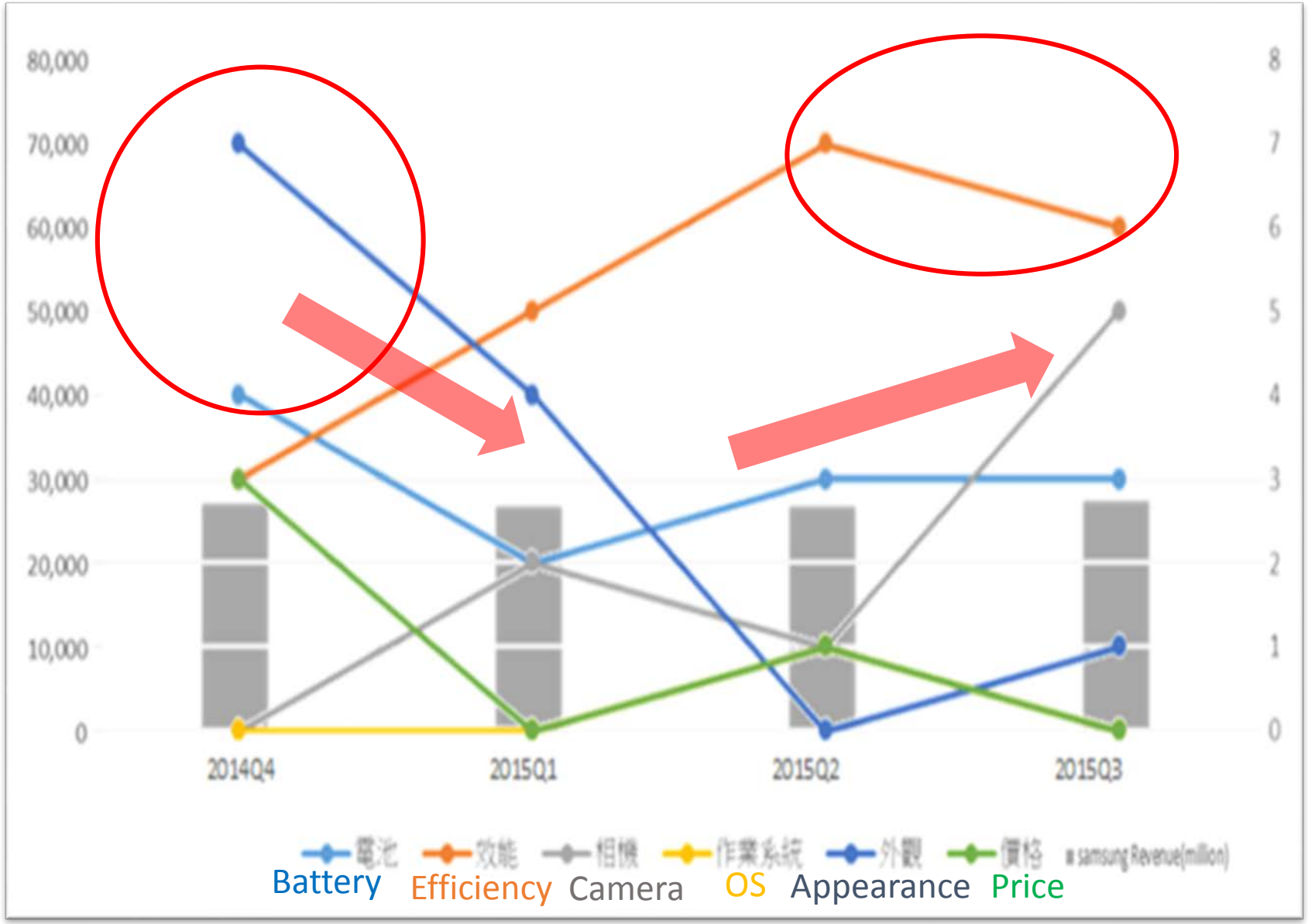

Result

Introduction

Literature review

Methodology

Result

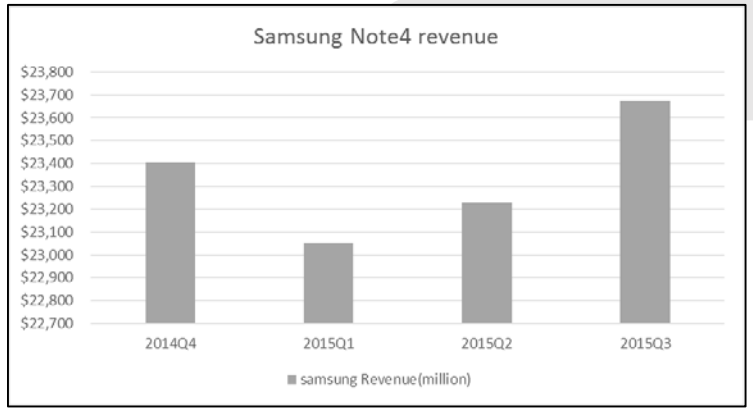

Result

Three factors influence the revenue (Samsung Note4)

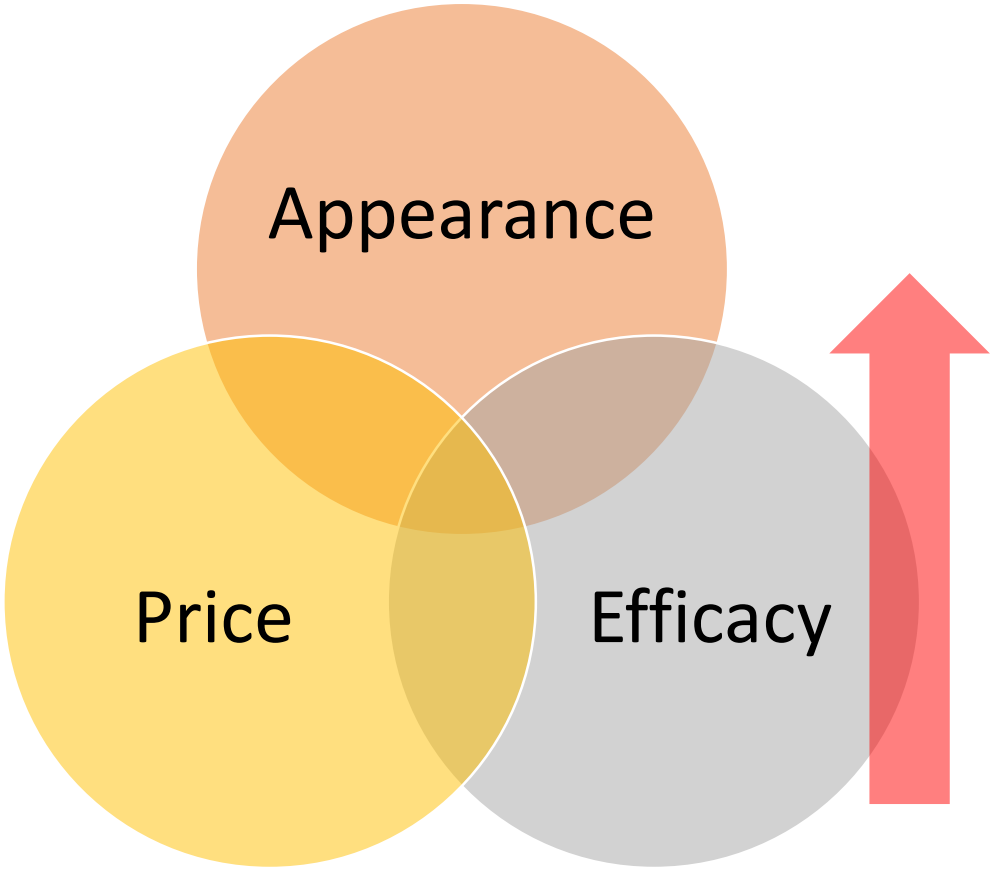

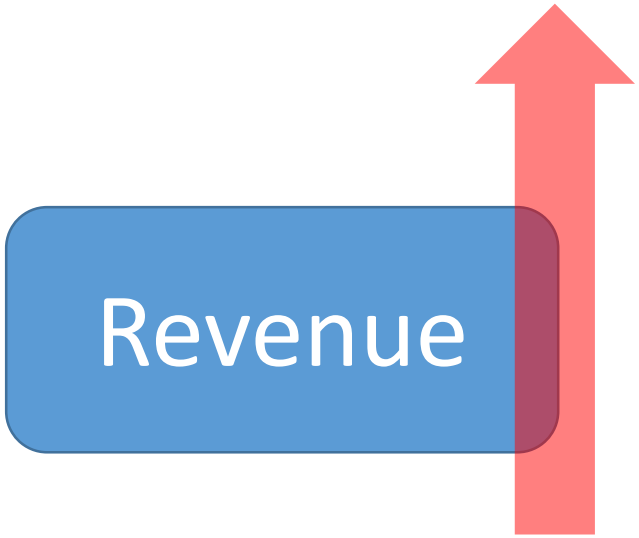

Reflected the customers' needs

Introduction
Literature review
Methodology
Result
Conclusion

comment's characteristics trend (iPhone6)

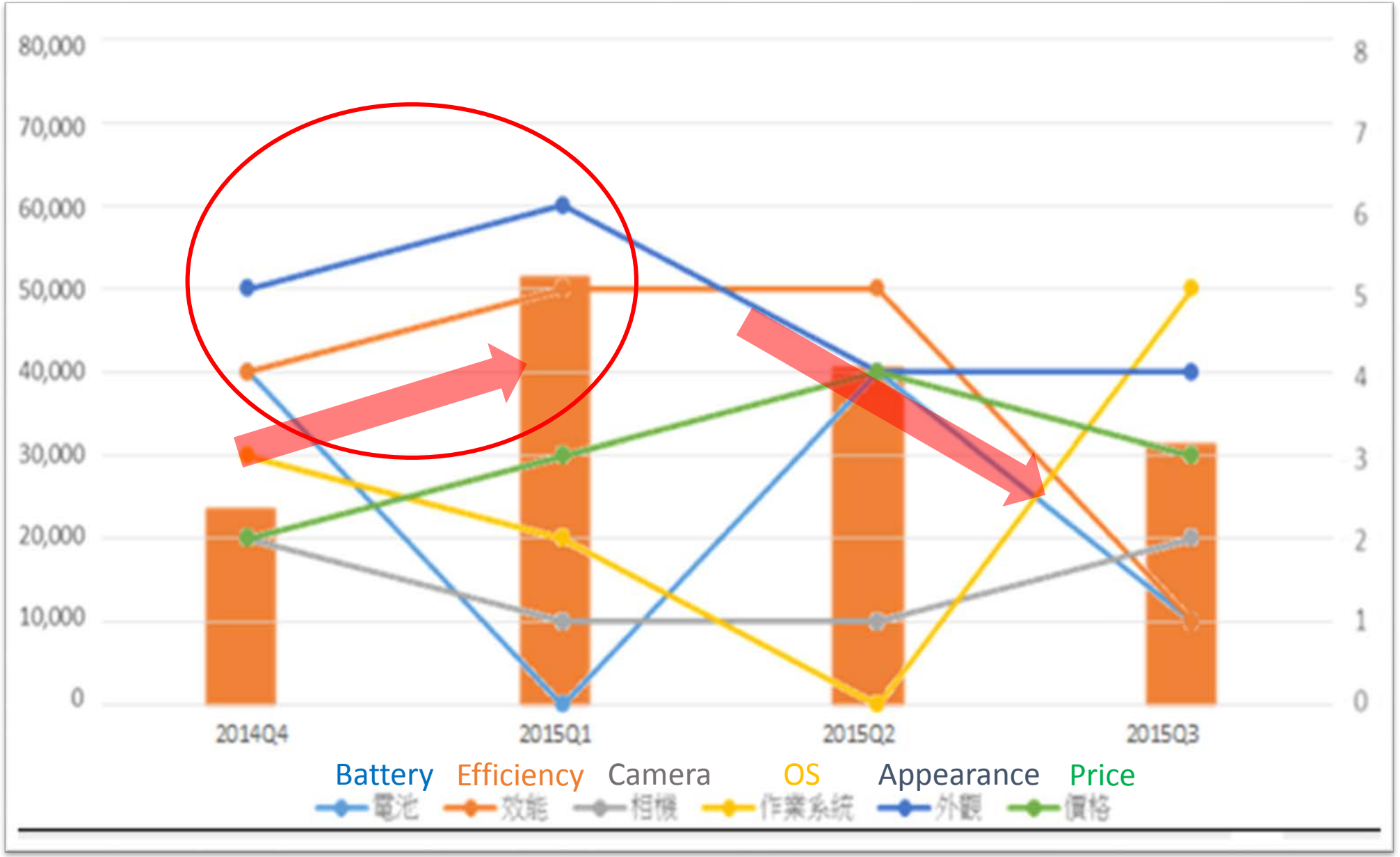

Result

Introduction
Literature review
Methodology
Result
Conclusion

Result

Three factors influence the revenue (iPhone6)

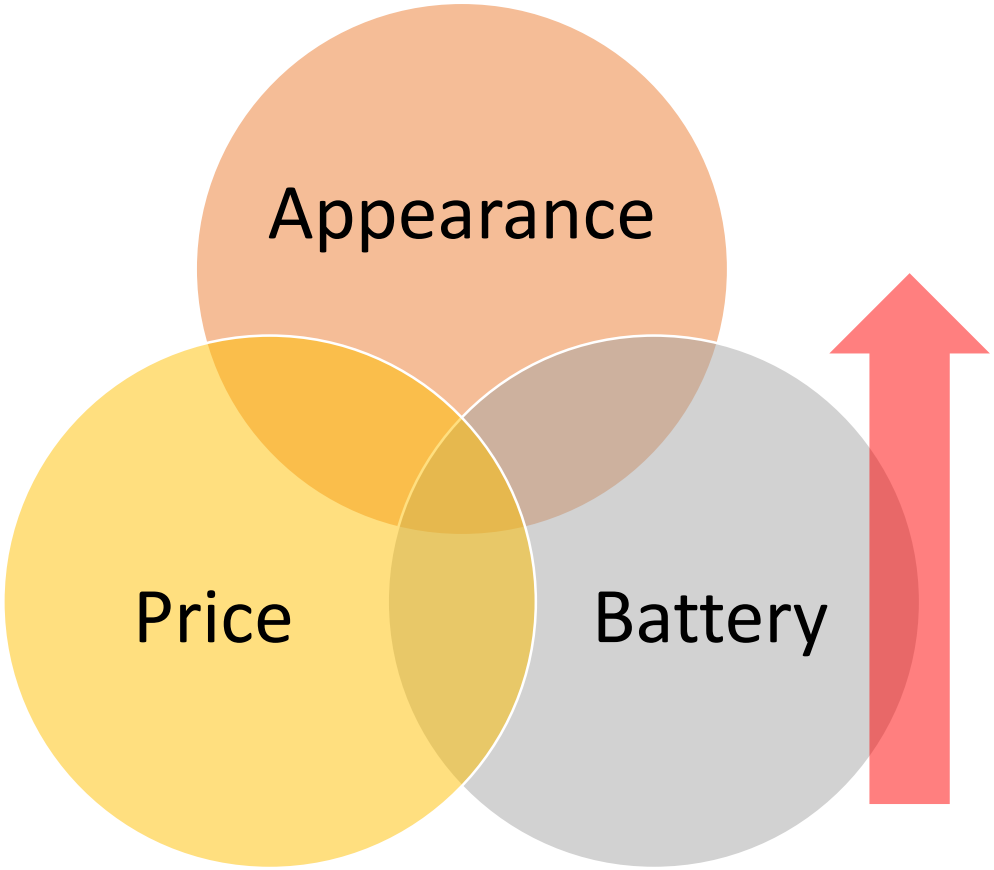

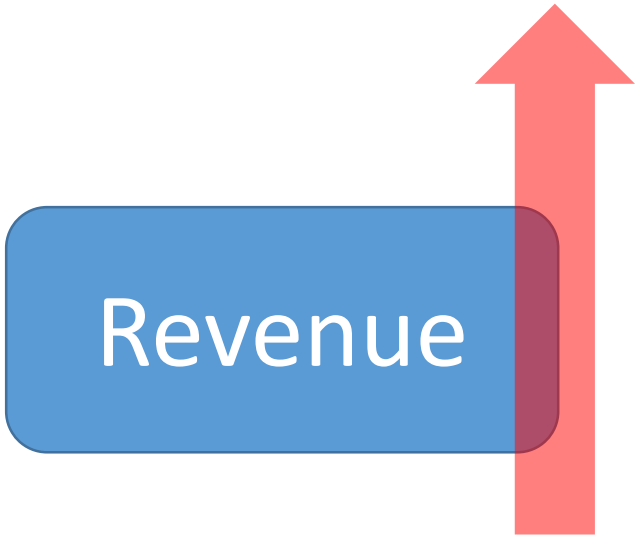

Reflected the customers' needs

Introduction
Literature review
Methodology
Result
Conclusion

Conclusion

- Under the assumption that the reality of these comments
- Some characteristics would affect the revenue
- Save the time to read comments and reduce the labor costs
- Provides the new product with right information to meet customer needs.

Introduction
Literature review
Methodology
Result
Conclusion

Conclusion

- Further improvement
- Develop a system can draw the trend picture automatically
- Adding positive and negative judgments
  - ✓ you can let the company refer to those marketing strategies to bring positive returns, those who may bring negative evaluation

Introduction
Literature review
Methodology
Result
Conclusion

thank you
danke
謝謝
ngiyabonga
teşekkür ederim
gracias
merci
obrigado
dziękuję
bedankt
спасибо
Баярлалаа
рахмат
dank je
mochchakkeram
go raibh maith agat
sukriya
kop khun krap
terima kasih
arigatô
dakujem
grazie
takk
taiku
sagolun
hvala
mauruuru
köszönöm
tapadh leat
мерси
감사합니다
ありがとう
ευχαριστώ
xièxie
mersi
barka
welalin
tack
spas
kia ora
faafetai lava
vinaka
спасибі
blagodaram
misaotra
matondo
paldies
grazzi
mahalo
хвала
asante
manana
obrigada
murakoze
tenki
chokrane
mamnun
дякую
djiere dieuf
tau
akun
dankon
aciù
kiitos
dankie
nanni
nandri
dhanyavad
bayarlalaa
gràcie
enkosi
sobodi
dèkuji
mèsi
didi madloba
najis tuke
kam sah hamnida
rahmat
chnorakaloutioun
gratias ago
gràcies
sulpáy
tanemirt
rahmet
diolch
dhanyavadagalu
shukriya
merce
trugarez
তোমাকে ধন্যবাদ